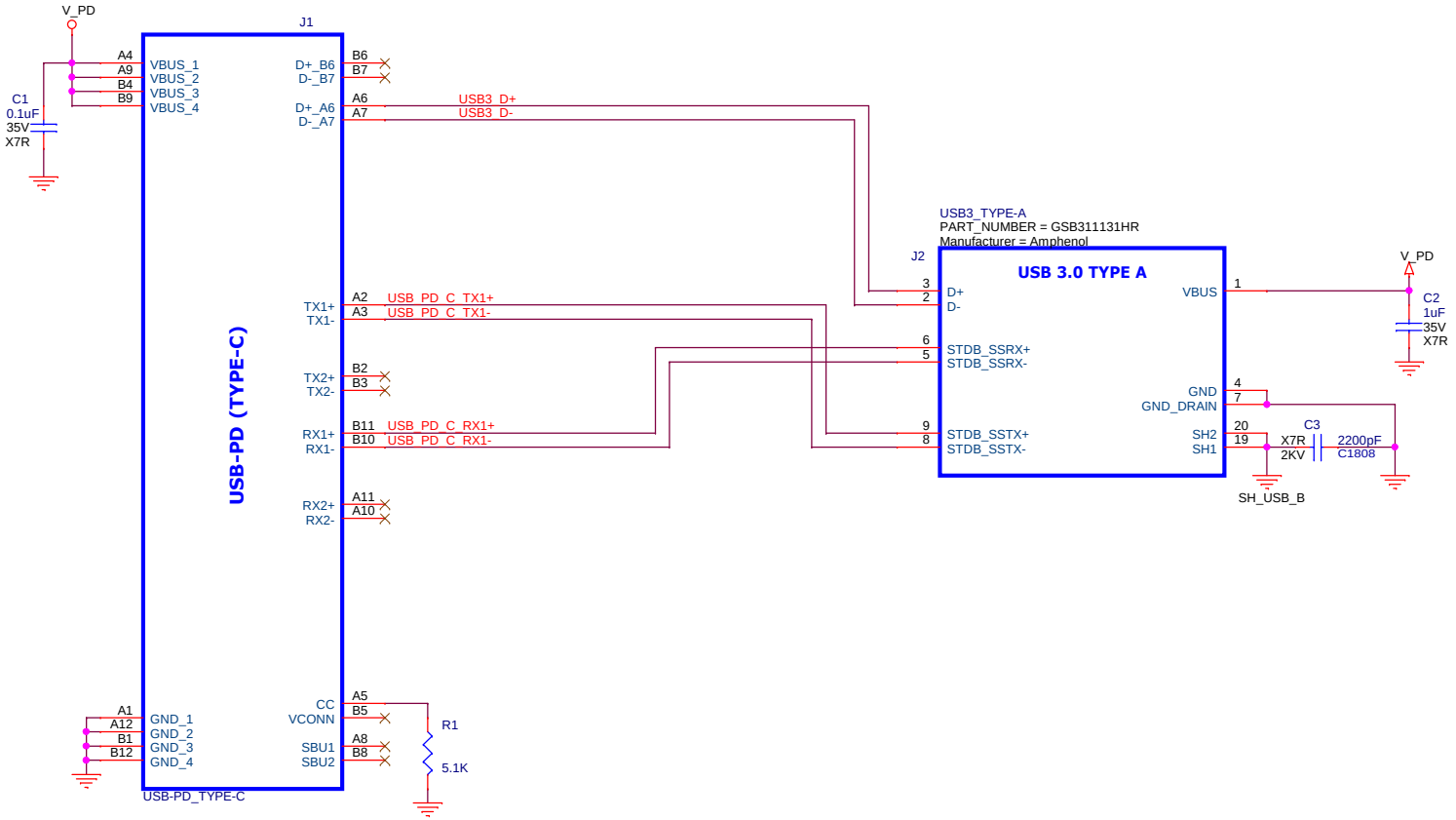

PCA: 121-60242-01
PCB: 600-60275-01
FAB DRW: 610-60277-01
ASSY DRW: 620-60285-01

CYPRESS SEMICONDUCTOR © 2015		
Title: CCG ADAPTOR BOARD		
Size: B	Document Number: 630-60283-01	Rev: 2.0
Date: Friday, December 11, 2015	Sheet 1 of 1	